Chintaly Imports

Assembly Instruction

ITEM NO.: KALINDA-SC

Thank you for purchasing this quality product. Be sure to check all packaging material carefully for small parts that may have come loose inside the carton during shipment.

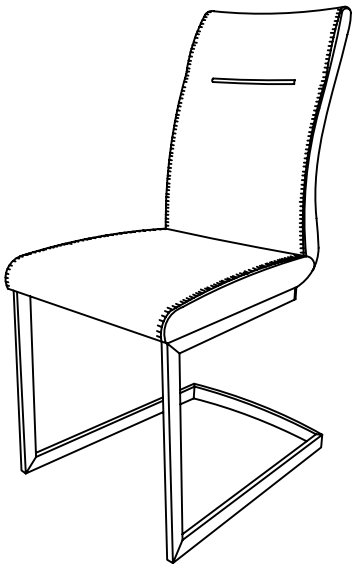

PARTS LIST:

NO	DESCRIPTION	SKETCH	QTY
A	BACK		1PC
B	GESTELL	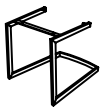	1PC

HARDWARE LIST:

NO	DESCRIPTION	SKETCH	QTY
a	SCREW	M6×20	2PCS
b	SCREW	M6×16	2PCS
c	WASHER	Φ16×Φ6	4PCS
d	ALLEN KEY	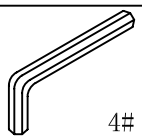 4#	1PC
e	SPRING WASHER	Φ10×Φ6	4PCS

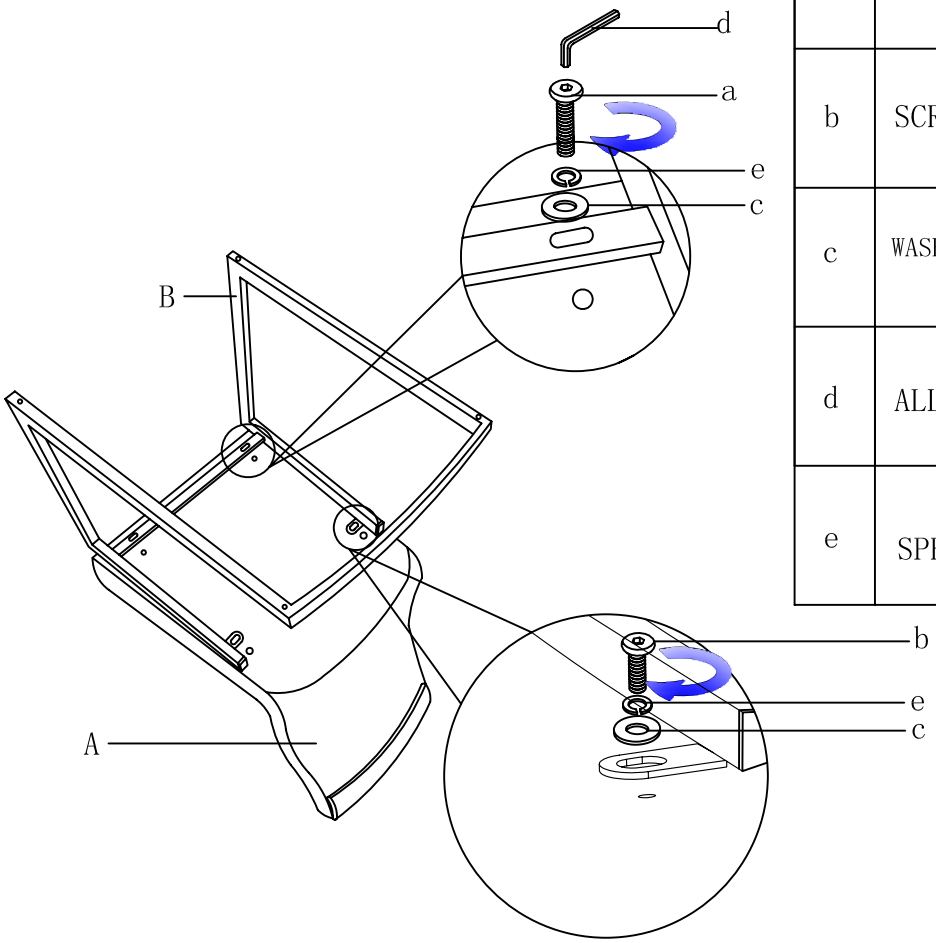

MADE IN CHINA